BIS Roofing Sheet Hanger VdS

(K 25 05)

fixing to profiled roofing sheet



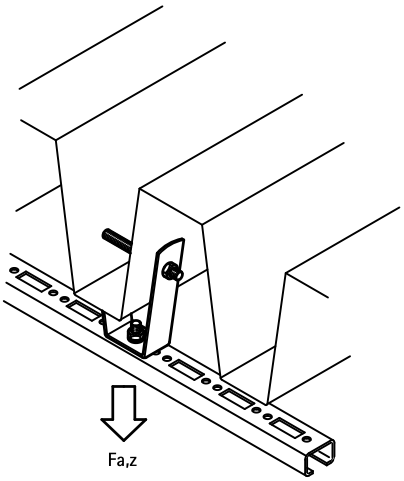

Features and benefits

- for mounting to profiled roofing sheet by means of pop rivets or threaded rod
- for fixing pipes up to DN 50 in stationary water extinguishing systems to profiled roofing sheets according to VdS guidelines
- variable distance to roof hanger by using a threaded rod
- material: steel
- pre-galvanized
- with VdS-approval - certificate number G 4070033

Part No.	G	$F_{a,z}$ (N)	VdS	Pack 1
6785001	Ø 13.0 mm	2,300	VdS	50
6785008	M8	2,300	VdS	50
6785010	M10	2,300	VdS	50

Maximum load ($F_{a,z}$) depends on the load capacity of the trapezium shaped roofing sheet. Before mounting, the roof load capacity has to be confirmed by a structural engineer.

VdS
Cert.Nr.
G 4070033

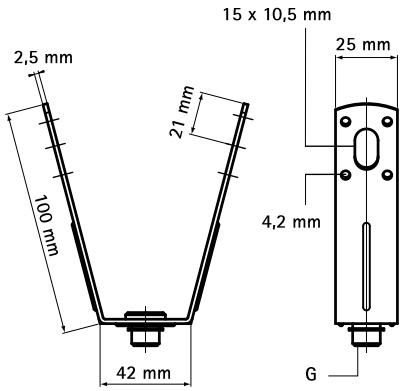

Complementary

BIS Hole Punching Plier
BIS Hexagon Nut