Model No.DGA513 Cordless Angle Grinder

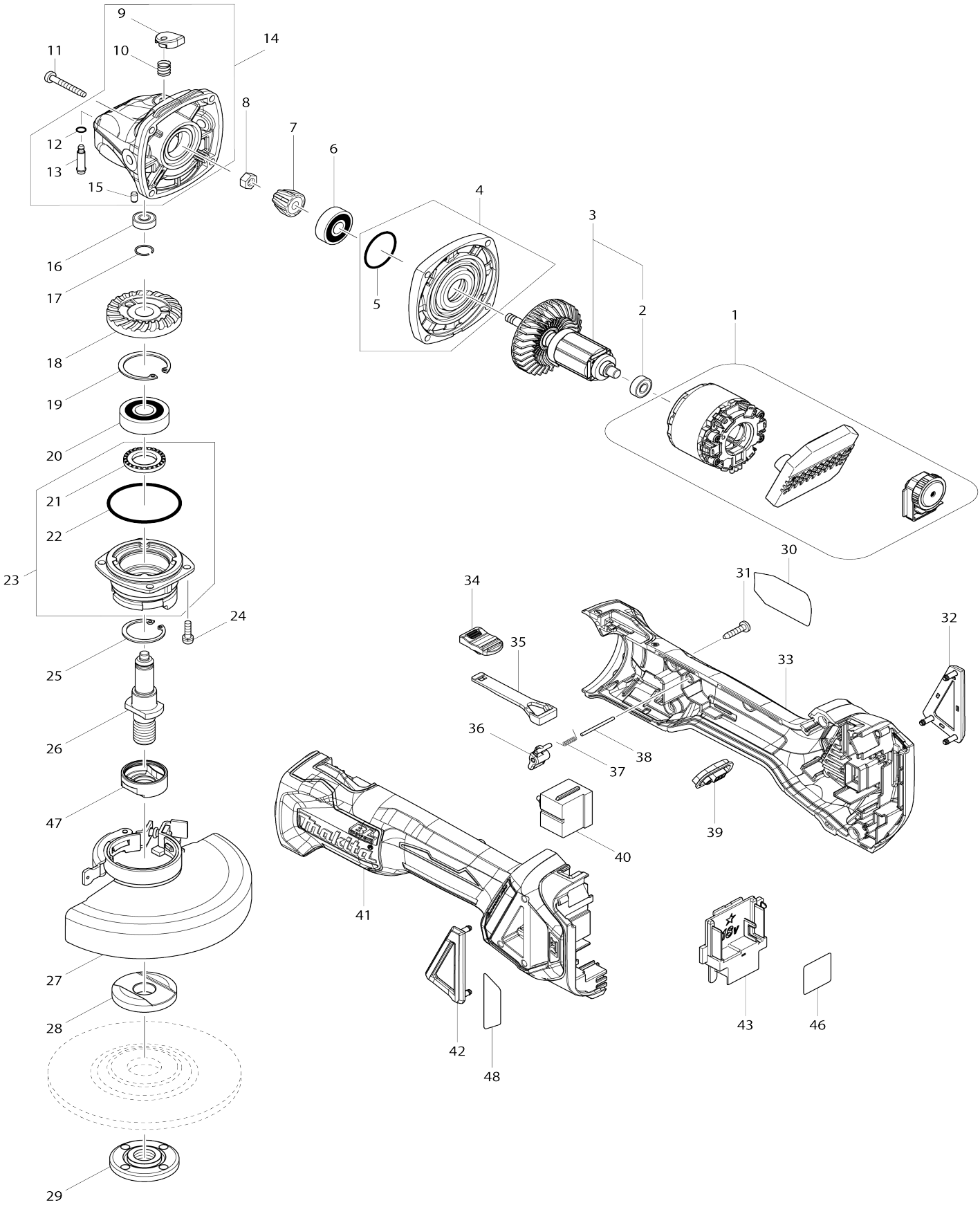

# Model No.DGA513 Cordless Angle Grinder

| Item No. | Parts No. | Description | Interchangeability | Q'ty | New/ Old | Note1 | Note2 |
|---|---|---|---|---|---|---|---|
| 001 | 629298-6 | Stator complete | | 1 | * | | |
| 001-1 | 629B61-9 | Stator | S | 1 | | | |
| 001-1D | 629B61-9 | Stator | | 1 | | | |
| 002 | 210169-4 | Ball bearing 607LLB | | 1 | | | |
| 003 | 510329-1 | Rotor assembly | | 1 | * | | |
| 003 | | INC. 2 | | | * | | |
| 003-1 | 510329-1 | Rotor assembly | O | 1 | | | |
| 003-1 | | INC. 2 | | | | | |
| 003-1D | 510329-1 | Rotor assembly | | 1 | | | |
| 003-1D | | INC. 2 | | | | | |
| 004 | 135930-7 | Gear housing cover assembly | | 1 | * | | |
| 004 | | INC. 5 | | | * | | |
| 004-1 | 136170-0 | Gear housing cover assembly | O | 1 | | | |
| 004-1 | | INC. 5 | | | | | |
| 004-1D | 136170-0 | Gear housing cover assembly | | 1 | | | |
| 004-1D | | INC. 5 | | | | | |
| 005 | 213445-5 | O-ring 26 | | 1 | * | | |
| 005-1 | 213407-3 | O-ring 26 | O | 1 | | | |
| 005-1D | 213407-3 | O-ring 26 | | 1 | | | |
| 006 | 210042-8 | Ball bearing 629LLB | | 1 | | | |
| 007 | 227541-3 | Spiral bevel gear 10 | | 1 | * | | |
| 007-1 | 226861-2 | Spiral bevel gear 10 | S | 1 | | | |
| 007-1D | 226861-2 | Spiral bevel gear 10 | | 1 | | | |
| 008 | 252186-8 | Hex. nut M6 | | 1 | | | |
| 009 | 417771-6 | Pin cap | | 1 | | | |
| 010 | 233072-2 | Compression spring 8 | | 1 | * | | |
| 010-1 | 233376-2 | Compression spring 8 | O | 1 | | | |
| 011 | 266361-0 | Binding head tapping screw 4X30 | | 4 | * | | |
| 011-1 | 265B70-0 | Binding head tapping screw 4X30 | O | 4 | | | |
| 011-1D | 265B70-0 | Binding head tapping screw 4X30 | | 4 | | | |
| 012 | 213960-9 | O-ring 5 | | 1 | | | |
| 013 | 256546-6 | Shoulder pin 4 | | 1 | | | |
| 014 | 135929-2 | Gear housing assembly | | 1 | | | |
| 014 | | INC. 9,10,12,13,15 | | | | | |
| 015 | 263002-9 | Rubber pin 4 | | 1 | | | |
| 016 | 210033-9 | Ball bearing 696ZZ | | 1 | | | |
| 017 | 233950-6 | Ring spring 11 | | 1 | | | |
| 018 | 227641-9 | Spiral bevel gear 37 | | 1 | * | | |
| 018-1 | 226862-0 | Spiral bevel gear 37 | S | 1 | | | |
| 018-1D | 226862-0 | Spiral bevel gear 37 | | 1 | | | |

| | | | | | | | |
|---|---|---|---|---|---|---|---|
| 019 | 962151-6 | Retaining ring (INT) R-32 | | 1 | | | |
| 020 | 211129-9 | Ball bearing 6201DDW | | 1 | | | |
| 021 | 262153-5 | Felt ring 16 | | 1 | | | |
| 022 | 213622-9 | O-ring 45 | | 1 | | | |
| 023 | 135949-6 | Bearing box assembly | | 1 | | | |
| 023 | | INC. 21,22 | | | | | |
| 024 | 911121-2 | Pan head screw M4X14 W | | 4 | | | |
| 025 | 962105-3 | Retaining ring (INT) R-26 | | 1 | | | |
| 026 | 326672-6 | Spindle | | 1 | | | |
| 027 | 123145-8 | Toolless wheel cover 125AK assembly | | 1 | * | | |
| C10 | 213009-5 | O-ring 4 | | 1 | * | | |
| C20 | 265180-1 | Pan head screw M5X16 | | 1 | * | | |
| 027-1 | 141P36-7 | Toolless wheel cover 125AK complete | < | 1 | | | |
| C10 | 213009-5 | O-ring 4 | | 1 | * | | |
| C20 | 265180-1 | Pan head screw M5X16 | | 1 | | | |
| C30 | 8050A1-8 | Caution label | | 1 | | | |
| 027-1D | 141P36-7 | Toolless wheel cover 125AK complete | | 1 | | | |
| C10 | 213009-5 | O-ring 4 | | 1 | * | | |
| C20 | 265180-1 | Pan head screw M5X16 | | 1 | | | |
| C30 | 8050A1-8 | Caution label | | 1 | | | |
| 028 | 224447-6 | Inner flange 42B | | 1 | | | |
| 029 | 224554-5 | Lock nut 14-45 | | 1 | | | |
| 030 | 853X81-5 | Name plate DGA513 | | 1 | | | |
| 031 | 266326-2 | Binding head tapping screw 4X18 | | 5 | * | | |
| 031-1 | 265B67-9 | Binding head tapping screw 4X18 | O | 5 | | | |
| 031-1D | 265B67-9 | Binding head tapping screw 4X18 | | 5 | | | |
| 032 | 455450-8 | Dust cover R | | 1 | | | |
| 033 | 183H83-4 | Housing set | | 1 | | | |
| C10 | 263005-3 | Rubber pin 6 | | 2 | | | |
| 033 | | INC. 41 | | | | | |
| 034 | 455447-7 | Switch knob | | 1 | | | |
| 035 | 455446-9 | Switch lever | | 1 | | | |
| 036 | 455448-5 | Lever | | 1 | | | |
| 037 | 231679-8 | Torsion spring 2 | | 1 | | | |
| 038 | 268330-7 | Pin 2 | | 1 | | | |
| 039 | 142901-7 | Indicator panel complete | | 1 | | | |
| 040 | 650579-7 | Switch 1246.3223 | | 1 | * | | |
| 040-1 | 650579-7 | Switch 1246.3223 | O | 1 | | | |
| 041 | 183H83-4 | Housing set | | 1 | | | |
| C10 | 263005-3 | Rubber pin 6 | | 2 | | | |
| 041 | | INC. 33 | | | | | |
| 042 | 455449-3 | Dust cover L | | 1 | | | |
| 043 | 643874-2 | Terminal | | 1 | | | |
| 046 | 853X86-5 | Serial No. label DGA513 | | 1 | | | |
| 047 | 310514-4 | Lead flange | | 1 | | | |
| 048 | 816D93-9 | Operation label | | 1 | | | |
| 049 | 620K24-2 | Controller | S | 1 | | | |
| | | | | | | | |

| | | | | | | | |
|---|---|---|---|---|---|---|---|
| 049D | 620K24-2 | Controller | | 1 | | | |
| 050 | 652119-7 | Pan head screw M2X6 | S | 6 | | | |
| 050D | 652119-7 | Pan head screw M2X6 | | 6 | | | |
| A01 | 158237-4 | Grip 36 complete | | 1 | | | |
| A02 | A-80656 | GRINDING WHEEL 125 WA36N | | 1 | | | |
| A03 | 782423-1 | Lock nut wrench 35 | | 1 | | | |
| A04 | 450128-8 | Battery cover | | 3 | | | |
| A05 | ***DC18RC | DC18RC FAST CHARGER | | 1 | | | |
| A05 | | COMPO-PARTS | | | | | |
| A06B | 197280-8 | Battery BL1850B set | | 2 | * | | |
| A06-1B | 197280-8 | Battery BL1850B set | O | 2 | | | |
| A06-1D | 197280-8 | Battery BL1850B set | | 3 | | | |
| A07 | 821551-8 | Connector plastic case (type 3) | | 1 | | | |
| C10 | 453974-8 | Latch | | 4 | | | |
| A08B | 816K14-3 | Indication label DGA513RTJ | | 1 | | | |
| A09B | 816K15-1 | Plastic case label DGA513RTJ | | 2 | | | |
| A10 | 839252-4 | Inner tray | | 1 | | | |
| A13 | 199710-5 | Cutting wheel cover attachment 125 set | | 1 | | | |
| A13D | 199710-5 | Cutting wheel cover attachment 125 set | | 1 | | | |
| D01 | 652044-2 | Binding head screw M3.5X5.0 | | 2 | | | |
| D01D | 652044-2 | Binding head screw M3.5X5.0 | | 2 | | | |
| F04-1 | 194514-0 | Vibration proof grip set | O | 1 | | | |
| F04-1D | 194514-0 | Vibration proof grip set | | 1 | | | |
| F05 | 191819-9 | Wire cup brush 90 set | | 1 | * | | |
| F07 | 195354-9 | Toolless lock nut set | | 1 | | | |
| F09 | 196845-3 | Dust collect cover K set (125MM) | | 1 | | | |
| F23 | 191W06-8 | Dust cover K set 115/125mm | | 1 | | | |
| C10 | 743129-6 | Brush A | | 1 | | | |
| C20 | 743130-1 | Brush B | | 1 | | | |
| F23D | 191W06-8 | Dust cover K set 115/125mm | | 1 | | | |
| C10 | 743129-6 | Brush A | | 1 | | | |
| C20 | 743130-1 | Brush B | | 1 | | | |
| F24 | 1919G1-3 | CHAMFERING D.C.A. SET | | 1 | | | |