Walraven Threaded Rod (BUP1000)

(K 55 08)

fixing to rail, wall plates, etc.



Features and Benefits

- according to DIN 976-1
- material: steel, strength class 4.8
- surface protection:
  - product is part of the Walraven BIS UltraProtect® 1000 system
  - suitable for in- and outdoor applications
  - stands min. 1,000 hours salt spray test (max. 5% red rust) according to ISO 9227

Part No.	Type	Thread (M)	L	$A_{s,nom}$ (mm2)	$F_{a,z}$ (N)	BndS
63081008	DIN 976-1	M8	1 m	36.6	9,700	50
63082008	DIN 976-1	M8	2 m	36.6	9,700	25
63081010	DIN 976-1	M10	1 m	58.0	15,400	25
63082010	DIN 976-1	M10	2 m	58.0	15,400	20
63081012	DIN 976-1	M12	1 m	84.3	22,400	20
63082012	DIN 976-1	M12	2 m	84.3	22,400	15
63081016	DIN 976-1	M16	1 m	157.0	41,800	10
63082016	DIN 976-1	M16	2 m	157.0	41,800	10

M12 tested for fire safety according to EN 1366-1.
M10 tested for fire safety according to EN 1366-1.

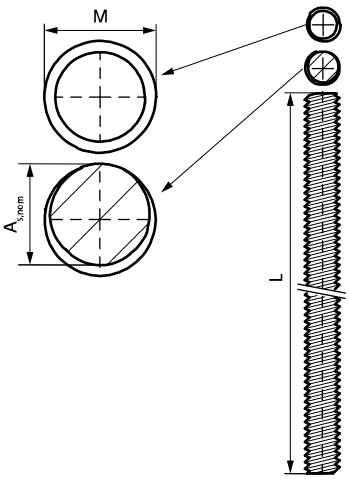

Complementary

Walraven Stud Connector (BUP1000)
BIS Brass Wall Plug
Walraven Stud Connector

Complementary

Walraven Threaded Rod Connector