Walraven KSB2 Clamp (M8/M10/½")

(A05118)

for steel, copper, cast iron and plastic (multilayer) pipe



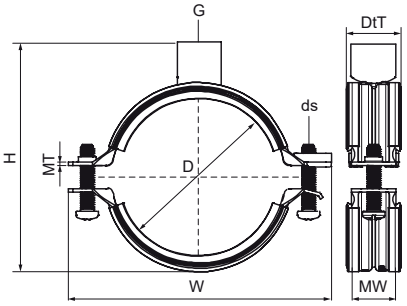

Features & benefits

- two-screw clamp with a triple connection nut
- quick closing mechanism for easy locking of the clamp with one hand
- full range from 10 to 225 mm
- the triple connection nut with M8/M10/G½" internal thread can be converted into a connection nut with M8/M10 internal thread and ½" external thread by unscrewing the sleeve
- material: steel
- zinc plated
- temperature resistance from -30 °C to +120 °C
- sound insulating lining according DIN 4109
- noise reduction according to ISO 3822-1 up to 21 dB(A)

EPD

Product Number	Outside Pipe Diameter	DN	Pipe Diameter Imperial	Connection Thread	Total Height	Total Width	Total Depth	Material Width	Material Thickness	Screw Size	Maximum Allowed Load Faz	Approvals
Reference Letter	*D*	*D*	*D*	*G*	*H*	*W*	*DtT*	*MW*	*MT*	*ds*	*Fa,z*	
Unit description	*mm*		*"*		*mm*	*mm*	*mm*	*mm*	*mm*		*N*	
33965014	10 - 14	DN 8	-	M8/M10/G½"	57	59	27	20	1.25	M6	400	EPD
33965019	15 - 19	DN 10	⅜	M8/M10/G½"	61	63	27	20	1.25	M6	400	EPD
33965023	20 - 23	DN 15	½	M8/M10/G½"	66	68	27	20	1.25	M6	400	EPD
33965028	25 - 28	DN 20	¾	M8/M10/G½"	72	74	27	20	1.25	M6	400	EPD
33965035	31 - 35	DN 25	1	M8/M10/G½"	78	80	27	20	1.25	M6	400	EPD
33965039	36 - 39	-	-	M8/M10/G½"	82	84	27	20	1.25	M6	400	EPD
33965045	40 - 45	DN 32	1¼	M8/M10/G½"	89	91	27	20	1.25	M6	400	EPD
33965052	48 - 52	DN 40	1½	M8/M10/G½"	95	97	27	20	1.25	M6	400	EPD
33965058	54 - 58	-	-	M8/M10/G½"	102	104	27	20	1.25	M6	400	EPD
33965064	60 - 64	DN 50	2	M8/M10/G½"	107	109	27	20	1.25	M6	400	EPD
33965070	66 - 70	-	-	M8/M10/G½"	115	118	27	20	1.50	M6	400	EPD
33965079	75 - 79	DN 65	2½	M8/M10/G½"	122	125	27	20	1.50	M6	700	EPD
33965083	80 - 83	-	-	M8/M10/G½"	121	131	27	20	1.50	M6	700	EPD
33965091	88 - 91	DN 80	3	M8/M10/G½"	137	142	27	23	2.00	M6	700	EPD
33965105	100 - 105	-	-	M8/M10/G½"	151	155	27	23	2.00	M6	1,230	
33965115	108 - 115	DN 100	4	M8/M10/G½"	159	164	27	23	2.00	M6	1,230	EPD
33965130	125 - 130	-	-	M8/M10/G½"	176	181	27	23	2.00	M6	1,230	EPD
33965140	133 - 140	DN 125	5	M8/M10/G½"	187	191	28	23	2.00	M6	1,230	EPD
33965160	152 - 160	-	-	M8/M10/G½"	207	211	28	23	2.00	M6	1,230	EPD
33965169	165 - 169	DN 150	6	M8/M10/G½"	215	225	27	25	2.50	M8	2,390	EPD
33965180	176 - 180	-	-	M8/M10/G½"	228	234	27	25	2.50	M8	2,390	EPD
33965200	192 - 200	-	-	M8/M10/G½"	247	253	27	25	2.50	M8	2,390	EPD
33965210	205 - 210	-	-	M8/M10/G½"	259	265	27	25	2.50	M8	2,390	EPD
33965225	219 - 225	DN 200	8	M8/M10/G½"	273	279	27	25	2.50	M8	2,390	EPD