Model No.HR2631FT Combination Hammer

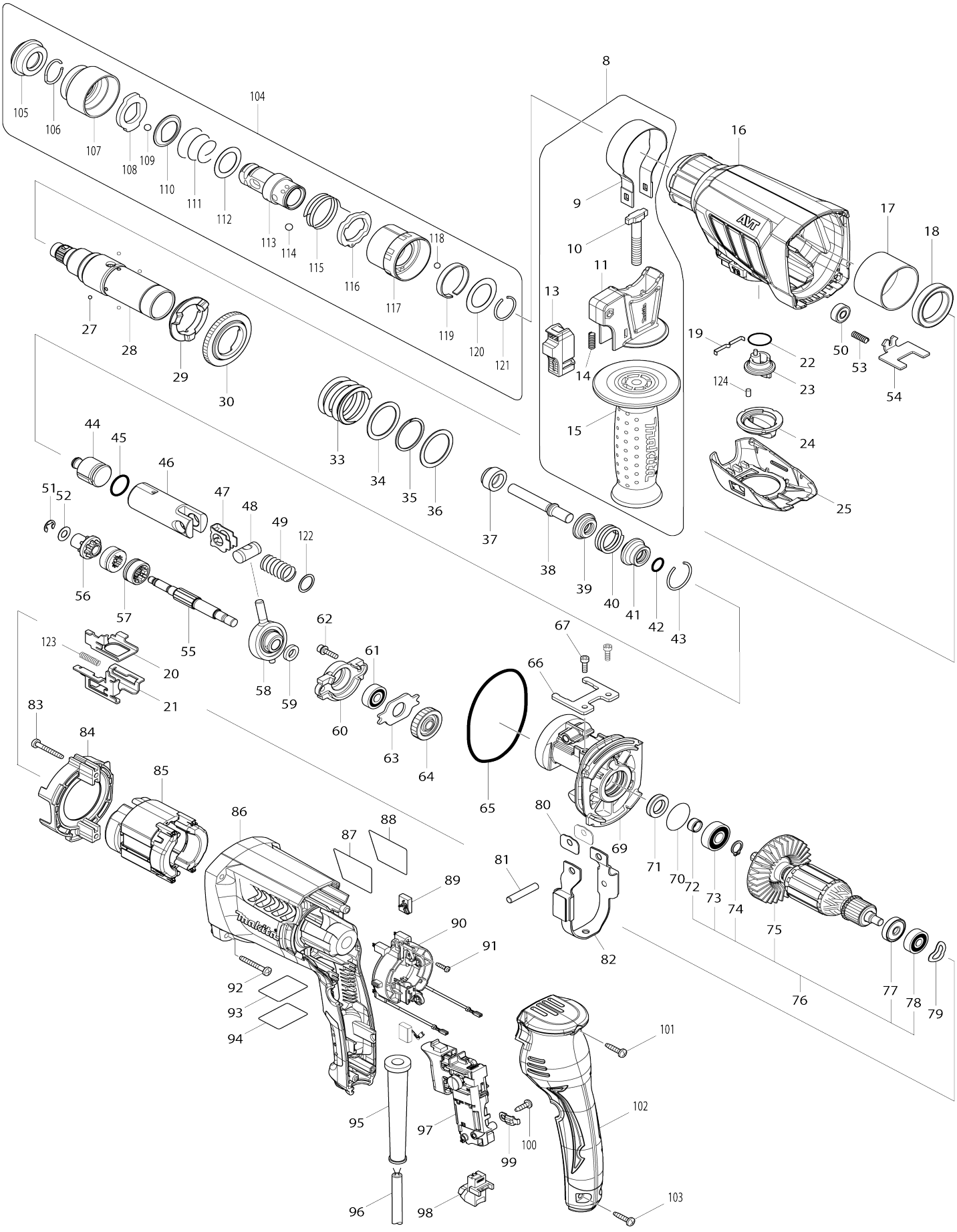

Model No.HR2631FT Combination Hammer

Item No.	Parts No.	Description	Interchangeability	Q'ty	New/ Old	Note1	Note2
008	122878-2	Grip assembly		1	*		
008		INC. 9-11,13-15			*		
008-1	127293-5	Grip assembly	O	1	*		
008-1		INC. 9-11,13-15			*		
008-2	122878-2	Grip assembly	O	1			
008-2		INC. 9-11,13-15					
009	346181-9	Grip spring 50		1			
010	266349-0	Square bolt M8X50		1			
011	451539-0	Grip base		1			
013	141765-6	Lock button complete		1			
014	233360-7	Compression spring 4		1			
015	154935-8	Grip 36 complete		1			
016	142970-8	Gear housing complete		1			
C10	213636-8	Oil seal 25		1			
017	331890-3	Cup sleeve		1			
018	211294-4	Ball bearing 6806LLU		1			
019	232286-0	Leaf spring		1			
020	346832-4	Change plate A		1	*		
020-1	346833-2	Change plate B	X	1			
021	346833-2	Change plate B		1	*		
021-1	346832-4	Change plate A	X	1			
022	213278-8	O-ring 17		1			
023	455392-6	Change lever		1			
024	455394-2	Change lever cap		1			
025	455391-8	Change lever cover		1			
027	216019-1	Steel ball 3		4	*		
027-1	216061-2	Steel ball 3	O	4	*		
027-2	216068-8	Steel ball 3	<	4			
028	140266-1	Tool holder guide complete		1			
C10	213344-1	Oil seal 9		1			
029	332139-4	Driving flange		1			
030	227360-7	Spur gear 51		1			
033	234148-8	Compression spring 31		1			
034	267153-0	Flat washer 30		1			
035	257932-4	Spiro lock washer 30		1			
036	267153-0	Flat washer 30		1			
037	325783-4	Sleeve 9B		1			
038	325791-5	Impact bolt B		1			
039	325792-3	Washer 10		1			
040	234149-6	Compression spring 20		1			
041	325793-1	O-ring case B		1			
042	213073-6	O-ring 9		1			
043	233979-2	Ring spring 28		1			
044	325784-2	Striker		1			
045	213258-4	O-ring 17.5		1			
046	310345-1	Piston cylinder		1			
047	346036-8	Guide plate		1			

048	324215-8	Piston joint		1			
049	234098-7	Compression spring 14		1			
050	210028-2	Ball bearing 606ZZ		1			
051	257336-0	Stop ring (EXT) U-6		1			
052	253186-1	Flat washer 7		1			
053	233360-7	Compression spring 4		1			
054	346831-6	Lock plate		1			
055	326448-1	Cam shaft		1			
056	227359-2	Spur gear 10		1			
057	332125-5	Clutch cam		2	*		
057-1	310678-4	Clutch cam	O	2			
058	219023-9	Swash bearing 10		1	*		
058-1	219043-3	SWASH BEARING 10	O	1			
059	257321-3	Ring 8		1			
060	310344-3	Bearing box		1			
061	211032-4	Ball bearing 608ZZ		1	*		
061-1	210223-4	Ball bearing 608ZZ	O	1			
062	266437-3	Hex. socket head bolt M4X16		2			
063	285735-6	Bearing retainer		1			
064	227719-8	Helical gear 26		1			
065	213728-3	O-ring 68		1			
066	346222-1	Plate		1			
067	265353-6	Hex. socket head bolt M4X12		2			
069	141573-5	Inner housing complete		1			
C10	443153-6	Felt		1			
070	213407-3	O-ring 26		1			
071	213678-2	Oil seal 12		1			
072	262569-4	Sleeve 9		1	*		
072-1	262207-8	Sleeve 9	O	1			
073	211097-6	Ball bearing 6000LLB		1			
074	961006-2	Retaining ring (EXT) S-10		1			
075	240121-8	Fan 65		1			
076	515359-7	Armature assembly 240V		1			
076		INC. 72-75,77,78					
077	681652-2	Insulation washer		1			
078	210023-2	Ball bearing 627DDW		1			
079	267804-5	Wave washer 15		1			
080	346180-1	Weight holder guide		2			
081	256246-8	Pin 6		1			
082	165593-5	Counter weight		1			
083	266361-0	Binding head tapping screw 4X30		2	*		
083-1	265B70-0	Binding head tapping screw 4X30	O	2			
084	451527-7	Baffle plate		1			
085	626634-7	Field 240V		1	*		
085-1	626634-7	Field 240V	O	1			
086	451535-8	Motor housing		1			
087	850L76-7	Name plate HR2631FT		1			
088	819390-8	Clear label		1	*		
088-1	816R90-9	Clear label	O	1	*		
089	194074-2	Carbon brush set CB-325		1			

090	638655-7	Brush holder unit		1			
091	266556-5	Pan head tapping screw 3X12		2			
092	266361-0	Binding head tapping screw 4X30		4	*		
092-1	265B70-0	Binding head tapping screw 4X30	O	4			
093	850L81-4	Serial No. label HR2631FT		1			
094	819389-3	Clear label		1	*		
094-1	816R89-4	Clear label	O	1	*		
095	682566-8	Cord guard 10		1			
096	665890-4	Power supply cord 1.0-2-4.0		1			
097	650625-6	Switch		1	*		
097-1	651090-2	Switch TG853TB-3	O	1			
098	631937-6	Light circuit		1			
099	687682-1	Strain relief		1			
100	266385-6	Binding head tapping screw 4X14		1	*		
100-1	265B74-2	Binding head tapping screw 4X14	O	1			
101	266326-2	Binding head tapping screw 4X18		1	*		
101-1	265B67-9	Binding head tapping screw 4X18	O	1			
102	451528-5	Handle cover		1			
103	266326-2	Binding head tapping screw 4X18		2	*		
103-1	265B67-9	Binding head tapping screw 4X18	O	2			
104	194080-7	Tool holder set		1			
104		INC. 105-121					
105	286263-4	Cap 35		1			
106	233940-9	Ring spring 19		1			
107	418217-5	Chuck cover		1			
108	345333-9	Stopper		1			
109	216022-2	Steel ball 7.0		1			
110	345187-4	Guide washer		1			
111	233916-6	Conical compression spring 21-29		1			
112	267279-8	Flat washer 21		1			
113	324355-2	Tool holder		1			
114	216013-3	Steel ball 6		2	*		
114-1	216062-0	Steel ball 6	O	2			
115	231669-1	Torsion spring 31		1			
116	345334-7	Change ring		1			
117	418218-3	Change cover		1			
118	216018-3	Steel ball 5.0		1			
119	345335-5	Leaf spring		1			
120	267270-6	Flat washer 24		1			
121	233924-7	Ring spring 21		1			
122	267447-3	Flat washer 14		1			
123	234343-0	Compression spring 5		1			
124	263005-3	Rubber pin 6		1			
A01	194079-2	Drill chuck set		1	*		
A01-1	194079-2	Drill chuck set	<	1	*		

A01-2	194079-2	Drill chuck set	O	1			
A02	331886-4	Depth gauge		1			
A03A	123225-0	Aluminum case assembly		1			
A03B	821550-0	Connector plastic case (type 2)		1			
C10	453974-8	Latch		4			
A04A	D-00795	SDS-PLUS BIT SET		1			
A04B	805S56-0	Plastic case label HR2631FTJ		2	*		
A04-1B	816V52-1	Plastic case label HR2631FTJ	X	2			
A05A	889918-6	Cap		1	*		
A05B	805S55-2	Indication label HR2631FTJ		1	*		
A05-1B	816V51-3	Indication label HR2631FTJ	O	1			
A06B	837914-8	Inner tray		1			
B01	195108-4	Hammer service kit		1			
C10	195127-0	Oil vessel set		2			
B01		INC. 42,43,45,89,105,109					
F03	194254-0	Keyless drill chuck set		1			
F04	192664-5	Keyless drill chuck set		1	*		
F05	192892-2	Keyless drill chuck set		1			
F07-1	194079-2	Drill chuck set	<	1			
F08	194080-7	Tool holder set		1			
F09	194683-7	Grease vessel set		1			
F34	195127-0	Oil vessel set		1			
F37	198993-4	Grease vessel set		1			
F38	1917K7-7	Dust extractor attachment set		1			
F39	192877-8	Drill chuck 13 set		1			
F40	1918R1-4	SEALING CAP B SET		1	*		
F40-1	1918R1-4	SEALING CAP B SET	O	1			
F41	1918L7-0	DUST EXTRACTION PAD SET		1	*		
F41-1	1918L7-0	DUST EXTRACTION PAD SET	O	1			
G12	1914X3-8	Dust extraction pad set		1			