Model No.DUH752 Cordless Hedge Trimmer

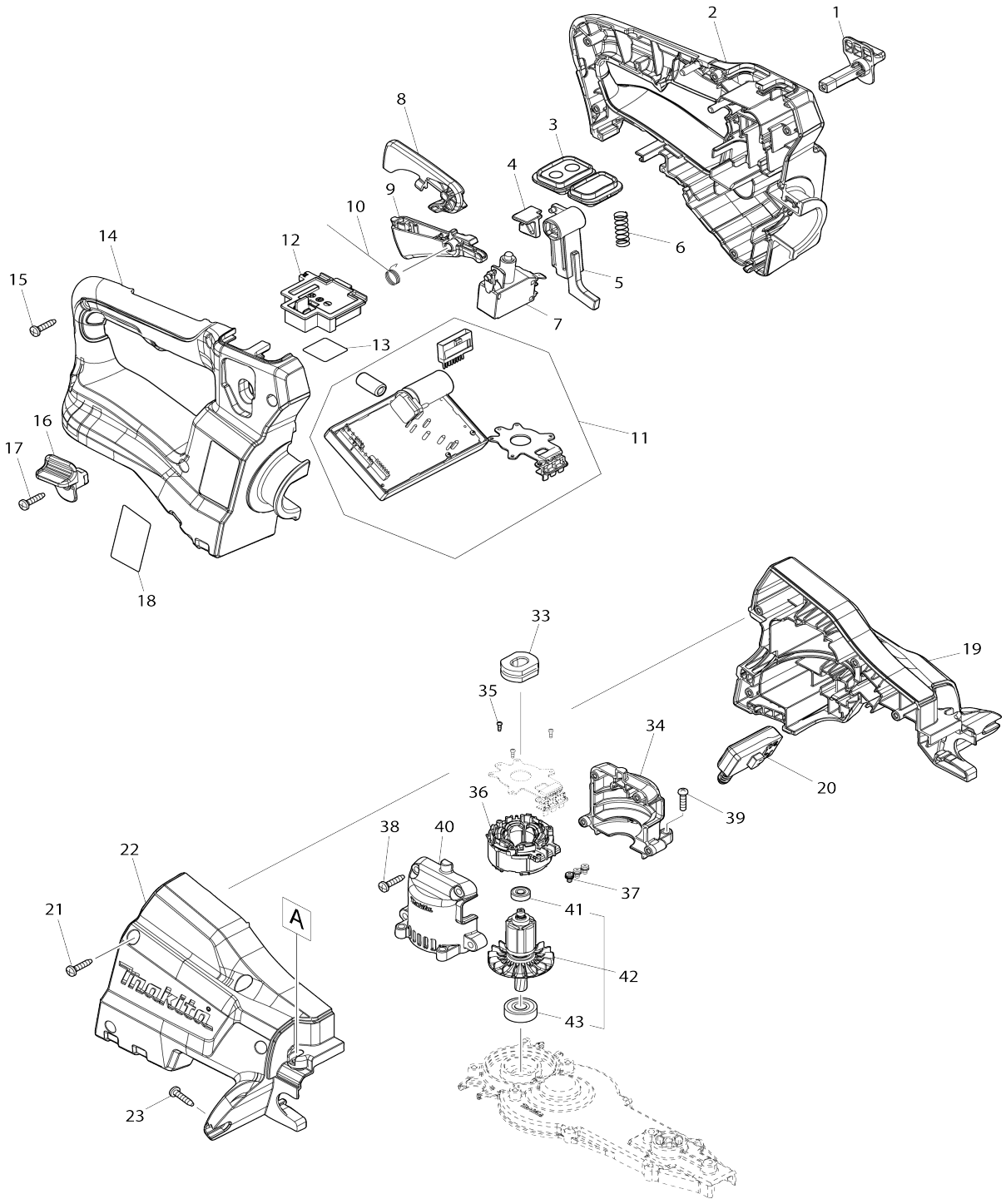

Model No.DUH752 Cordless Hedge Trimmer

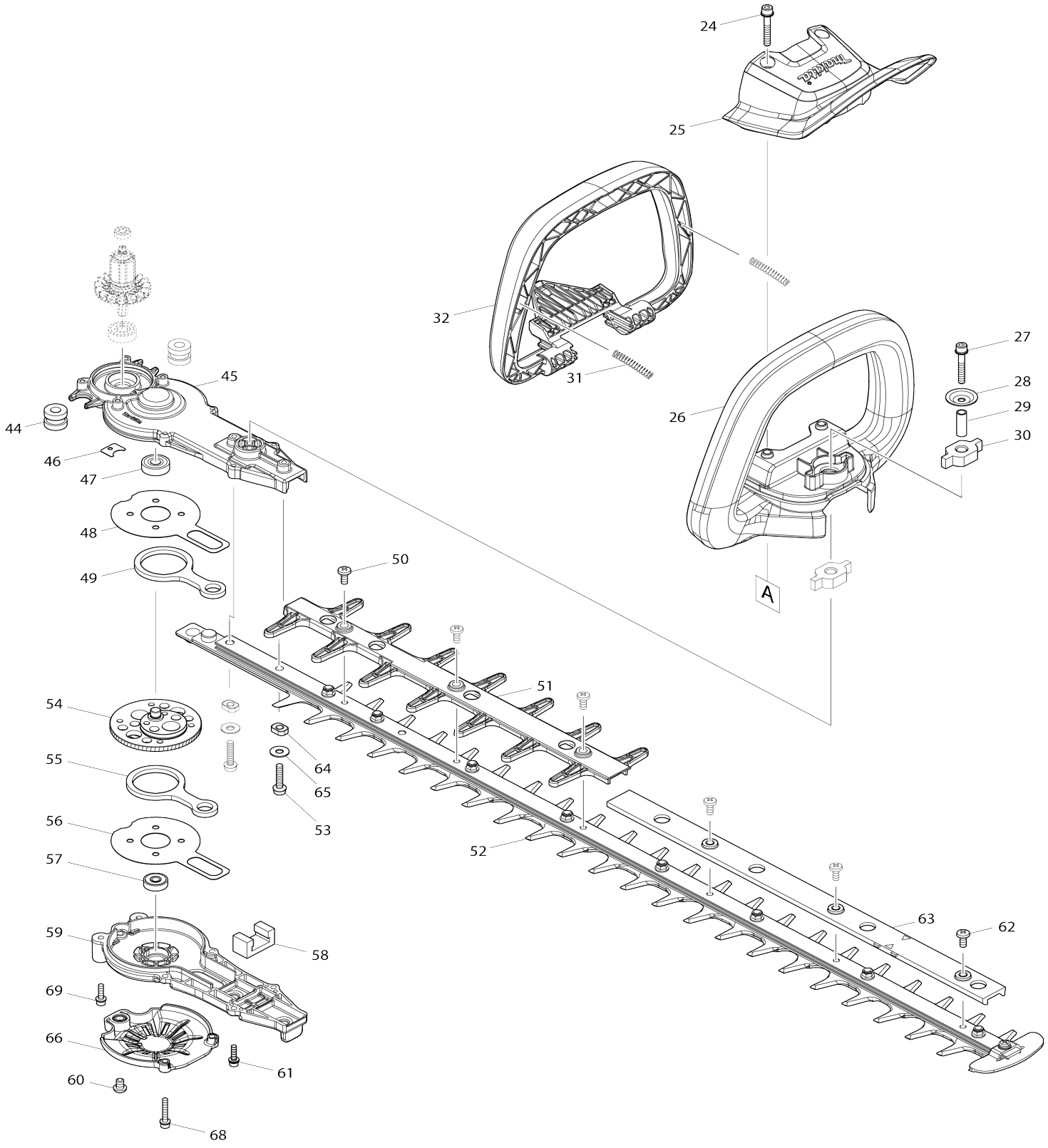

Model No.DUH752 Cordless Hedge Trimmer

Item No.	Parts No.	Description	Interchangeability	Q'ty	New/ Old	Note1	Note2
001	458406-0	Lock lever L		1			
002	183J51-9	Handle set		1	*		
C10	263005-3	Rubber pin 6		2	*		
002		INC. 14			*		
002-1	183J51-9	Handle set	O	1			
C10	263005-3	Rubber pin 6		2			
002-1		INC. 14					
003	140A04-7	Sub controller complete		1			
C10	806G56-1	Indication label		1			
C20	817C42-3	Switch label		1			
004	458570-7	Slider		1			
005	458405-2	Lock arm		1			
006	234204-4	Compression spring 8		1			
007	650781-2	Switch C3JW-6B-P		1			
008	458403-6	Lock off lever		1			
009	458404-4	Switch lever R		1			
010	232454-5	Torsion spring 10		1			
011	620818-9	Controller		1	*		
011-1	620B18-3	Controller	O	1	*		
011-2	620E32-7	Controller	<	1	*		
011-3	620K06-4	Controller	<	1	*		
011-4	620M96-9	Controller	<	1			
012	644809-6	Terminal		1	*		
012-1	644028-4	Terminal	O	1			
013	855G72-0	Serial No. label DUH752		1			
014	183J51-9	Handle set		1	*		
C10	263005-3	Rubber pin 6		2	*		
014		INC. 2			*		
014-1	183J51-9	Handle set	O	1			
C10	263005-3	Rubber pin 6		2			
014-1		INC. 2					
015	266326-2	Binding head tapping screw 4X18		6	*		
015-1	265B67-9	Binding head tapping screw 4X18	O	6			
016	458407-8	Lock lever R		1			
017	266326-2	Binding head tapping screw 4X18		1	*		
017-1	265B67-9	Binding head tapping screw 4X18	O	1			
018	855G66-5	Name plate DUH752		1			
019	183K21-4	Housing set		1			
C10	252143-6	Collared hex. nut M5		2			
C20	424344-8	Damper		4			
019		INC. 22					
020	651083-9	Switch C3XA-1PSPM		1			
021	266326-2	Binding head tapping screw 4X18		4	*		
021-1	265B67-9	Binding head tapping screw 4X1	O	4			

		8					
022	183K21-4	Housing set		1			
C10	252143-6	Collared hex. nut M5		2			
C20	424344-8	Damper		4			
022		INC. 19					
023	266326-2	Binding head tapping screw 4X18		2	*		
023-1	265B67-9	Binding head tapping screw 4X18	O	2			
024	265182-7	Pan head screw M5X25		2			
025	458399-1	Protector		1			
026	458400-2	Front grip E		1			
027	251476-6	Hex. socket head bolt M5X35 WR		1	*		
027-1	265D13-4	Hex. socket head bolt M5X35 WRM	O	1	*		
027-2	265E44-9	Hex. socket head bolt M5X35 WRM	<	1			
028	253416-0	Dish washer 5		1			
029	257678-2	Sleeve 6		1			
030	422260-8	Rubber sleeve 8		2			
031	233222-9	Compression spring 5		2			
032	458402-8	Switch lever F		1			
033	422261-6	Rubber sleeve		1			
034	183J52-7	Motor housing set		1	*		
034		INC. 40			*		
034-1	183L66-8	Motor housing set	<	1	*		
034-1		INC. 40			*		
034-2	183L66-8	Motor housing set	<	1			
034-2		INC. 40					
035	266490-9	Pan head tapping screw 2X6		3	*		
035-1	265C47-1	Pan head tapping screw 2X6	O	3			
036	629352-6	Stator		1			
037	652069-6	Flat head screw M3X6		3			
038	266326-2	Binding head tapping screw 4X18		4	*		
038-1	265B67-9	Binding head tapping screw 4X18	O	4			
039	265178-8	Pan head screw M4X16		4	*		
039-1	911128-8	Pan head screw M4X16 WR	O	4			
040	183J52-7	Motor housing set		1	*		
040		INC. 34			*		
040-1	183L66-8	Motor housing set	<	1	*		
040-1		INC. 34			*		
040-2	183L66-8	Motor housing set	<	1			
040-2		INC. 34					
041	211157-4	Ball bearing 695ZZ		1			
042	519557-5	Rotor assembly		1	*		
042		INC. 41,43			*		
042-1	510450-6	Rotor assembly	<	1	*		
042-1		INC. 41,43			*		
042-2	510450-6	Rotor assembly	O	1			
042-2		INC. 41,43					
043	211032-4	Ball bearing 608ZZ		1	*		

043-1	210005-4	Ball bearing 608DDW	<	1			
044	422259-3	Rubber sleeve 8		2			
045	140F22-5	Gear housing complete		1	*		
C10	424344-8	Damper		1	*		
045-1	136278-0	Gear housing assembly	S	1	*		
C10	424344-8	Damper		1	*		
C20	213961-7	O-ring 22		1	*		
045-2	136278-0	Gear housing assembly	O	1	*		
C10	424344-8	Damper		1	*		
C20	213961-7	O-ring 22		1	*		
045-3	136278-0	Gear housing assembly	O	1			
C10	424344-8	Damper		1			
C20	213961-7	O-ring 22		1			
046	458417-5	Gasket		1	*		
047	211032-4	Ball bearing 608ZZ		1			
048	347361-0	Friction plate		1			
049	347362-8	Connecting rod		1			
050	915211-3	Binding head screw M5X12		3			
051	458408-6	Guard E		1	*		
051-1	412908-0	Guard E	<	1			
052	199600-2	Shear blade assembly 750S set		1	*		
C10	345205-8	Brunch catcher		1	*		
C20	911208-0	Pan head screw M5X10 WR		1	*		
C30	188369-3	Oil vessel set		1	*		
052		INC. 64,65			*		
052-1	199600-2	Shear blade assembly 750S set	<	1	*		
C10	345205-8	Brunch catcher		1	*		
C20	911208-0	Pan head screw M5X10 WR		1	*		
C30	188369-3	Oil vessel set		1	*		
052-1		INC. 64,65			*		
052-2	191R58-9	Shear blade 750 S set	<	1			
C10	345205-8	Brunch catcher		1			
C20	911208-0	Pan head screw M5X10 WR		1	*		
C21	911208-0	Pan head screw M5X10 WR	<	1			
C30	188369-3	Oil vessel set		1			
C40	257465-9	Ring 5		8			
C50	264013-7	Hex. lock nut M5-8		8			
C60	253571-8	Flat washer 5		8			
C70	265A40-3	Truss head screw M5X20		8			
052-2		INC. 64			*		
052-2		INC. 50,51,62-64					
053	265182-7	Pan head screw M5X25		2	*		
053-1	265B66-1	Pan head screw M5X25 WR	S	2			
054	140B79-2	Gear complete		1			
055	347362-8	Connecting rod		1			
056	347361-0	Friction plate		1			
057	211499-6	Ball bearing 626ZZ		1			
058	443159-4	Seal		1			
059	140B62-9	Gear housing cover complete		1	*		
059-1	140B62-9	Gear housing cover complete	O	1			
060	265338-2	Hex. socket button head bolt M6 X8		1			

061	265A29-1	Hex. socket head bolt M4X16 WR M		2			
062	915211-3	Binding head screw M5X12		3			
063	458629-0	Spacer 750		1			
064	257465-9	Ring 5		2			
065	253804-1	Flat washer 6		2	*		
066	458907-8	Under cover		1			
068	265698-2	Hex. socket head bolt M4X25 WR M		2			
069	265A29-1	Hex. socket head bolt M4X16 WR M		2			
A01	459122-7	Blade cover 750S		1	*		
A01-1	4132R4-5	BLADE COVER 750	<	1			
A02	195246-2	Safety goggle set		1	*		
A03B	***DC18SD	DC18SD BATTERY CHARGER		1	*		
A03B		COMPO-PARTS			*		
A03C	***DC18RC	DC18RC FAST CHARGER		1			
A03C		COMPO-PARTS					
A03-1B	***DC18SD	DC18SD BATTERY CHARGER	O	1			
A03-1B		COMPO-PARTS					
A04B	197600-6	Battery BL1830B set		1	*		
A04C	197280-8	Battery BL1850B set		1	*		
A04-1B	197600-6	Battery BL1830B set	O	1			
A04-1C	197280-8	Battery BL1850B set	O	1			
F03-2	191R52-1	Chip receiver 750E set	<	1			
F04-1	199450-5	Grease vessel set	O	1			
F06	199600-2	Shear blade assembly 750S set		1	*		
F06-2	191R58-9	Shear blade 750 S set	<	1			