Model No.DPB183 Cordless Portable Band Saw

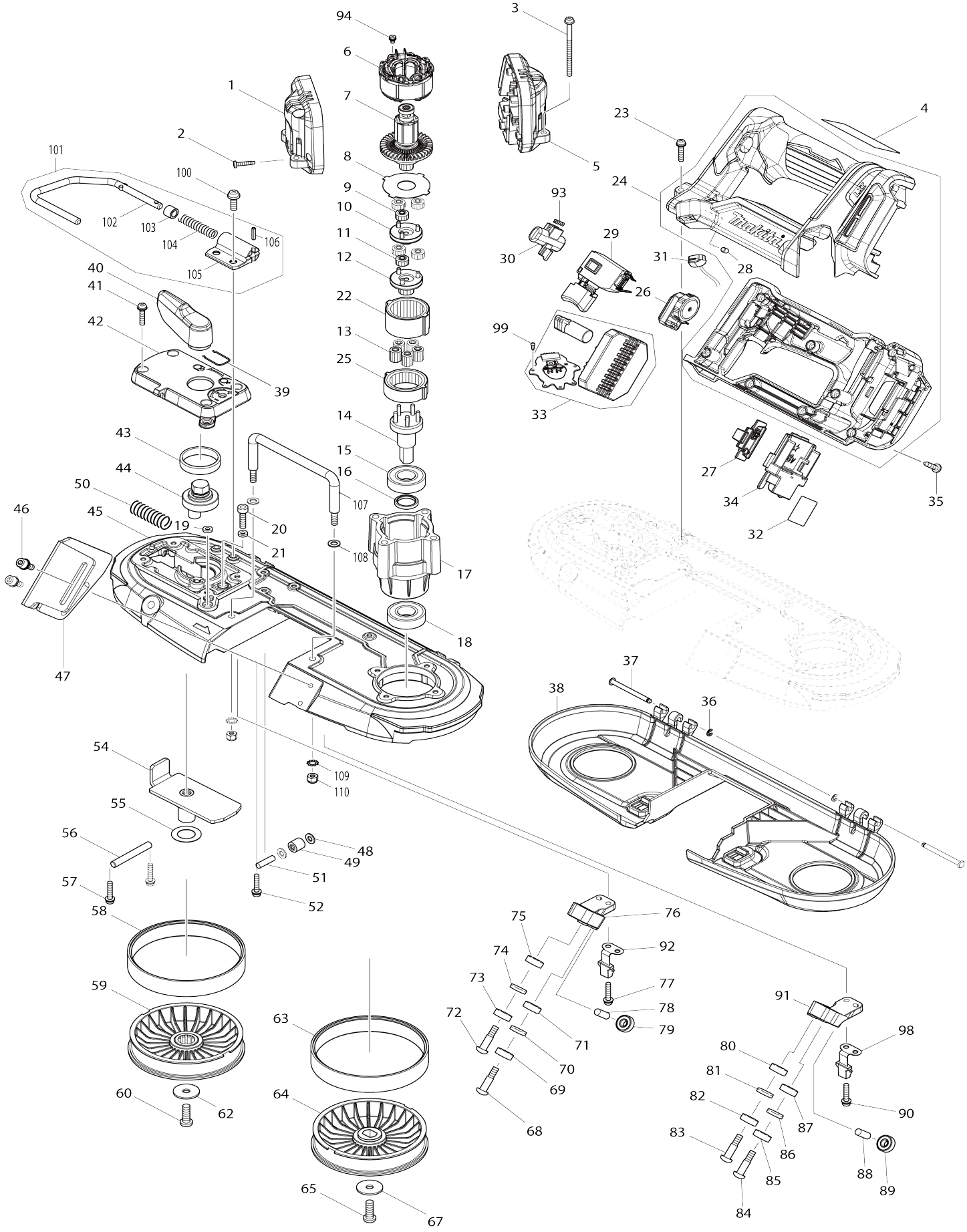

Model No.DPB183 Cordless Portable Band Saw

Item No.	Parts No.	Description	Interchangeability	Q'ty	New/ Old	Note1	Note2
001	183P49-2	Motor housing set		1			
001		INC. 5					
002	266130-9	Binding head tapping screw 3X16		5			
003	911188-0	Pan head screw M4X60 WR		4			
004	857C69-1	Name plate DPB183		1			
005	183P49-2	Motor housing set		1			
005		INC. 1					
006	629482-3	Stator		1			
007	619628-9	Rotor		1			
008	253474-6	Lock washer		1			
009	226923-6	Spur gear 13		3			
010	140M80-3	Spur gear 14B complete		1			
011	226923-6	Spur gear 13		3			
012	140M81-1	Spur gear 16 complete		1			
013	226924-4	Spur gear 11		5			
014	140T74-0	Spindle complete		1			
015	211247-3	Ball bearing 6002DDW		1			
016	257348-3	Ring 15		1			
017	319980-2	Gear housing		1			
018	211247-3	Ball bearing 6002DDW		1			
019	262130-7	Urethane ring 4		1			
020	265382-9	Hex. socket head bolt M5X20		1			
021	262130-7	Urethane ring 4		1			
022	226921-0	Internal gear 40		1			
023	911138-5	Pan head screw M4X20 WR		4			
024	183R20-8	Handle set		1	*		
C10	263005-3	Rubber pin 6		2	*		
024		INC. 28			*		
024-1	1832G8-1	HANDLE SET	<	1			
C10	263005-3	Rubber pin 6		2			
024-1		INC. 28					
025	226922-8	Internal gear 39		1			
026	620A64-0	Dial circuit		1			
027	140T79-0	Indication plate complete		1			
028	263027-3	Rubber pin 4		1	*		
028-1	422D35-9	SPACER	X	1			
029	651486-7	Switch C3JW-4B-R		1			
030	412551-5	Lock off button		1	*		
030-1	4137J5-7	LOCK OFF BUTTON	O	1			
031	620521-2	LED circuit		1			
032	857C76-4	Serial No. label DPB183		1			
033	620D03-8	Controller		1			
034	643874-2	Terminal		1			
035	266130-9	Binding head tapping screw 3X16		8			
036	961017-7	Stop ring (EXT) E-3		2			
037	256689-4	Flat fillister HD. pin 4		2			

038	412485-2	Wheel cover		1			
039	231955-0	Ring spring 12		1			
040	271462-1	Lever 54		1			
041	911138-5	Pan head screw M4X20 WR		4			
042	459084-9	Lever holder		1			
043	214408-4	Plane bearing 30		1			
044	326351-6	Lever shaft		1			
045	140V75-0	Frame complete		1			
C10	424736-1	Sponge		1			
C20	263005-3	Rubber pin 6		1			
046	922224-7	Hex. socket head bolt M5X16 WG		2			
047	346728-9	Stopper plate		1			
048	267010-2	Flat washer 5		2			
049	212199-1	Needle bearing 510		1			
050	234313-9	Compression spring 9		1			
051	256155-1	Pin 5		1			
052	911138-5	Pan head screw M4X20 WR		1			
054	162564-3	Slide plate		1			
055	267164-5	Flat washer 15		1			
056	268241-6	Pin 6		1			
057	911138-5	Pan head screw M4X20 WR		2			
058	424589-8	Rubber tire		1			
059	140J07-5	Wheel complete A		1			
060	265484-1	Hex. socket button head bolt M6 X17		1			
062	267173-4	Flat washer 6		1			
063	424589-8	Rubber tire		1			
064	459087-3	Wheel B		1			
065	265484-1	Hex. socket button head bolt M6 X17		1			
067	267173-4	Flat washer 6		1			
068	251337-0	Pan head shoulder screw M5		1			
069	210187-2	Ball bearing 696ZZ		1			
070	941152-7	Flat washer 6		1	*		
071	210187-2	Ball bearing 696ZZ		1			
072	251337-0	Pan head shoulder screw M5		1			
073	210187-2	Ball bearing 696ZZ		1			
074	941152-7	Flat washer 6		1	*		
075	210187-2	Ball bearing 696ZZ		1			
076	319995-9	Upper holder		1	*		
076-1	312J78-4	UPPER HOLDER	S	1			
077	911138-5	Pan head screw M4X20 WR		2			
078	256033-5	Pin 6		1			
079	210187-2	Ball bearing 696ZZ		1			
080	210187-2	Ball bearing 696ZZ		1			
081	941152-7	Flat washer 6		1	*		
082	210187-2	Ball bearing 696ZZ		1			
083	251337-0	Pan head shoulder screw M5		1			
084	251337-0	Pan head shoulder screw M5		1			
085	210187-2	Ball bearing 696ZZ		1			
086	941152-7	Flat washer 6		1	*		
087	210187-2	Ball bearing 696ZZ		1			

088	256033-5	Pin 6		1			
089	210187-2	Ball bearing 696ZZ		1			
090	911138-5	Pan head screw M4X20 WR		2			
091	319994-1	Lower holder		1	*		
091-1	312J77-6	LOWER HOLDER	S	1			
092	162815-4	Hook		1			
093	231433-0	Compression spring 4		1			
094	652069-6	Flat head screw M3X6		3			
098	162815-4	Hook		1			
099	266490-9	Pan head tapping screw 2X6		3			
100	911223-4	Pan head screw M5X16 WR		2			
101	127601-0	Hook assembly		1			
101		INC. 102-106					
102	281028-9	Hook		1			
103	262561-0	Sleeve 6		1			
104	233455-6	Compression spring 7		1			
105	313127-0	Joint		1			
106	951057-3	Spring pin 3-12		1			
107	327637-1	Guard		1			
108	941102-2	Flat washer 5		2			
109	253484-3	Toothed lock washer 5		2	*		
109-1	941102-2	Flat washer 5	O	2			
110	264013-7	Hex. lock nut M5-8		2			
A01	783202-0	Hex. wrench 4		1			
A02	B-40559	PORTABLE BANDSAW BLADE 18T PI		1			
B01	191G64-8	Hook assembly set		1			
B01		INC. 100,101					
F02	821950-4	PLASTIC CASE		1			