Model No.DCG180 Cordless Caulking Gun

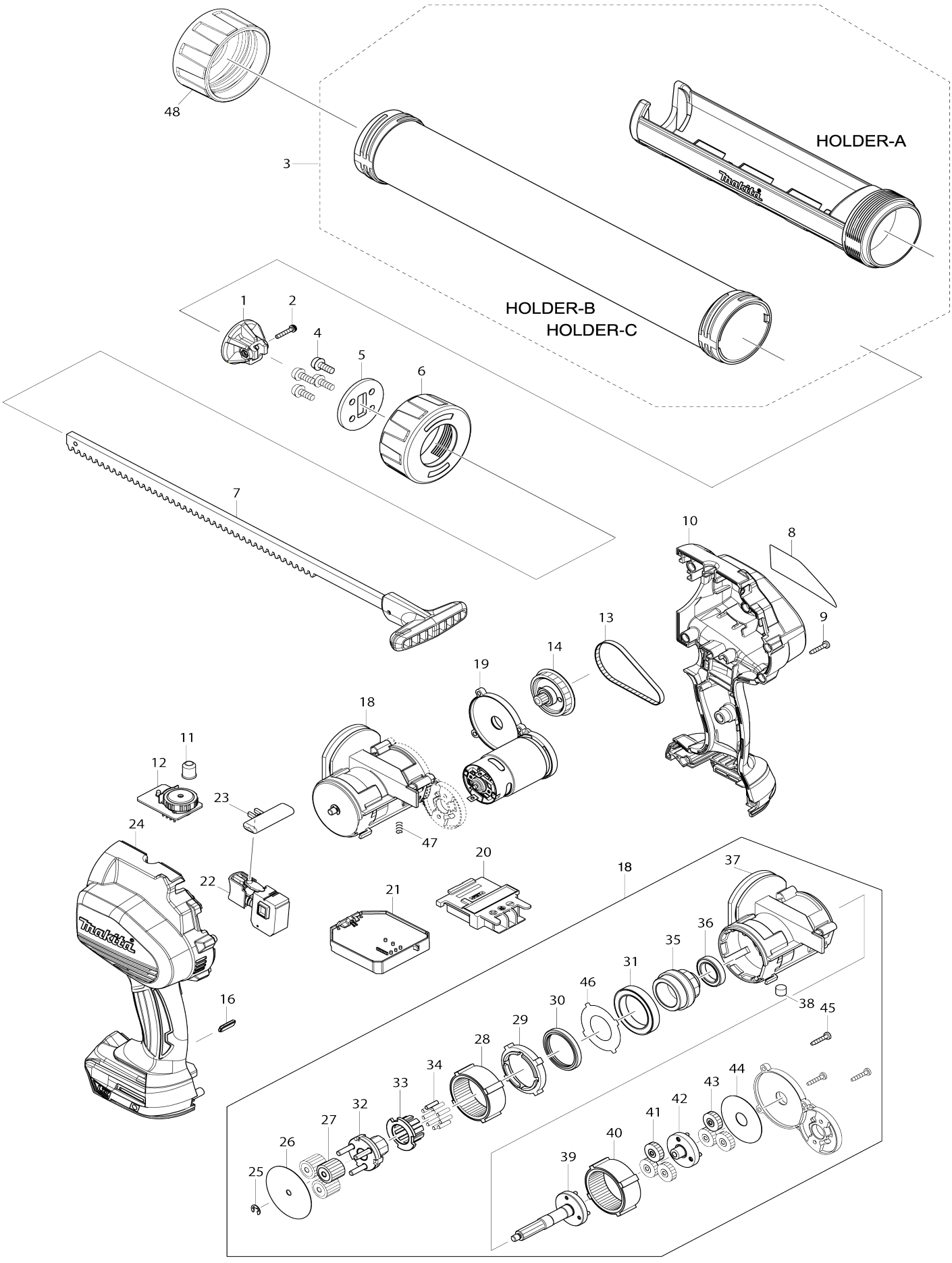

Model No.DCG180 Cordless Caulking Gun

Item No.	Parts No.	Description	Interchangeability	Q'ty	New/ Old	Note1	Note2
001	142071-2	Piston A complete		1			
001	142072-0	Piston B complete		1			
002	266827-0	Pan head screw M3X18 WR		1			
003	454275-7	Holder A		1			
003	141861-0	Holder B complete		1	*		
003-1	141M10-7	Holder B complete	S	1			
004	265074-0	Pan head screw M5X16		4			
005	346649-5	Plate		1			
006	454223-6	Holder joint A		1			
006	318958-2	Holder joint B		1	*		
006-1	312D41-1	Holder joint B	S	1			
007	142041-1	Rack 42 complete		1			
007	142042-9	Rack 64 complete		1			
008	815F86-5	Name plate DCG180		1			
009	266429-2	Binding head tapping screw 3X16		9	*		
009-1	266130-9	Binding head tapping screw 3X16	O	9			
010	187618-5	Housing set		1	*		
C10	263005-3	Rubber pin 6		2	*		
010		INC. 24			*		
010-1	187619-3	Housing set	S	1			
C10	263005-3	Rubber pin 6		2			
010-1		INC. 24					
011	418821-0	Lens		1			
012	620180-2	Sub controller		1			
013	225097-0	Synchro belt 4-176		1			
014	142038-0	Spur gear 9A complete		1			
016	454230-9	Lens		1			
018	126253-4	Gear assembly		1			
018		INC. 25-46					
019	142066-5	Motor complete		1			
020	643860-3	Terminal		1	*		
020-1	643874-2	Terminal	S	1			
021	632A61-4	Controller unit		1	*		
C10	688172-7	Line filter		1	*		
021-1	632L34-3	Controller unit	O	1	*		
C10	688172-7	Line filter		1	*		
C11	688172-7	Line filter	O	1	*		
021-2	632W17-9	Controller unit	<	1			
C11	688172-7	Line filter	O	1			
022	650632-9	Switch		1			
023	451162-1	Lock lever		1	*		
023-1	413R94-8	Lock lever	O	1			
024	187618-5	Housing set		1	*		
C10	263005-3	Rubber pin 6		2	*		
024		INC. 10			*		
024-1	187619-3	Housing set	S	1			

C10	263005-3	Rubber pin 6		2			
024-1		INC. 10					
025	961011-9	Stop ring (EXT) E-4		1			
026	267465-1	Flat washer 5		1			
027	227311-0	Spur gear 19B		3			
028	227309-7	Internal gear 48		1			
029	454220-2	Spacer		1	*		
029-1	144375-8	Spacer complete	S	1			
030	213768-1	Oil seal 30		1	*		
031	211294-4	Ball bearing 6806LLU		1			
032	141860-2	Carrier A complete		1			
033	313253-5	Carrier B		1			
034	256255-7	Pin 3		9			
035	227312-8	Spur gear 10		1			
036	211482-3	Ball bearing 6803LLU		1			
037	454219-7	Gear housing		1			
038	313257-7	Magnet		1			
039	141859-7	Spur gear 9C complete		1			
040	227309-7	Internal gear 48		1			
041	227310-2	Spur gear 19A		3			
042	141858-9	Spur gear 9B complete		1			
043	227310-2	Spur gear 19A		3			
044	267466-9	Flat washer 12		1			
045	266429-2	Binding head tapping screw 3X16		3	*		
045-1	266130-9	Binding head tapping screw 3X16	O	3			
046	346721-3	Plate 23		1			
047	234315-5	Compression spring 6		1			
048	318958-2	Holder joint B		1	*		
048-1	312D41-1	Holder joint B	S	1			
A01	195246-2	Safety goggle set		1	*		
A02	123221-8	Piston C complete		1			
C10	424546-6	Rubber seal		1			
A02	***DC18RC	DC18RC FAST CHARGER		1			
A03	142071-2	Piston A complete		1			
A03G	194513-2	Battery BL1815 set		2			
A03H	194204-5	Battery BL1830 set		2	*		
A03I	196235-0	Battery BL1815N set		2	*		
A03-1H	194204-5	Battery BL1830 set	O	2	*		
A03-1I	196235-0	Battery BL1815N set	O	2			
A03-2H	197600-6	Battery BL1830B set	<	2	*		
A03-3H	197600-6	Battery BL1830B set	O	2			
A04	266827-0	Pan head screw M3X18 WR		2			
A04	821568-1	Plastic case		1			
C10	162271-8	Latch		2			
A05	424547-4	Rubber ring		1			
A05G	802X75-7	Plastic case label DCG180RHE		2			
A05H	802X73-1	Plastic case label DCG180RFE		2			

A05I	803B53-8	Plastic case label DCG180RYE		2			
A06	454226-0	Nozzle		3	*		
A06	450128-8	Battery cover		1			
A06-1	454226-0	Nozzle	O	3	*		
A06-2	454226-0	Nozzle	O	3			
A07J	***DC18RC	DC18RC FAST CHARGER		1			
A08J	196235-0	Battery BL1815N set		2	*		
A08-1J	196235-0	Battery BL1815N set	O	2			
A09J	821568-1	Plastic case		1			
C10	162271-8	Latch		2			
A10J	804M32-5	Plastic case label DCG180RYEX		2			
A11J	450128-8	Battery cover		1			
A12	454275-7	Holder A		1			
A13	454223-6	Holder joint A		1			
A14	142041-1	Rack 42 complete		1			
F06	194513-2	Battery BL1815 set		1			
F07-3	197606-4	Battery BL1830B set (2 pcs)	O	1	*		
F08	195445-6	Battery BL1815 set		1			
F09	196351-8	Holder A set		1			
F10-1	1911T4-0	Holder B set	O	1	*		
F10-2	1911T4-0	Holder B set	O	1			
F11	196448-3	Battery BL1815N set		1	*		
F11-2	196235-0	Battery BL1815N set	O	1			
F12-1	196449-1	Battery BL1815N set	O	1			
F13	196450-6	Battery BL1815N set		1	*		
F13-2	196449-1	Battery BL1815N set	O	1			
F14	197195-9	Holder C set		1			
C10	143220-4	Rack 53 complete		1			
C20	143221-2	Piston D complete		1			
C30	143223-8	Holder joint C complete		1			
C40	266827-0	Pan head screw M3X18 WR		1			
C50	455951-6	Holder C		1			
C60	455952-4	Holder joint C		1			
F16-1	1911T5-8	Holder D set	O	1	*		
F16-2	1911T5-8	Holder D set	O	1			